Vector Frame Counter 07

VFC-07

Vector Frame™ counters compliment the Vector Frame series of exhibit kits, but are also ideal for any stand-alone event or display. Vector Frame counters couple simple extrusion-based frames with push-fit graphics or rigid sintra graphics. Countertops are available in four colored finishes. Custom sizes also available.

features and benefits:

- Features push-fit fabric graphics and simple extrusion based frames
- Choose from four countertop finishes
- Easy step-by-step instructions
- Allow for extra storage by removing one fabric panel
- OCH2 portable shipping case
- Lifetime limited warranty against manufacturer defects

dimensions:

Hardware

Assembled unit:
46”w x 40.5”h x 22.625”d
1168.4mm(w) x 1029mm(h) x 575mm(d)

Shipping

Shipping dimensions - ships in 1 case:
OCH2 case: 52”l x 30”w x 15”h
1300mm(l) x 750mm(w) x 400mm(h)

Approximate shipping weight (entire kit):
73.44 lbs / 33.3 kgs

Graphic

Total visual area:
Front (wraps around):
46.24”w x 39.24”h
1174mm(w) x 997mm(h)

Back: 15.625”w x 39.24”h
397mm(w) x 997mm(h)

Please be sure to include a 2” bleed around the perimeter

Refer to related graphic template for more information

Visit:
www.exhibitors-handbook.com/graphic-templates

additional information:

Graphic material:
Dye-sublimated fabric

Countertop color options:

silver black mahogany natural

Counter holds max weight
20 lbs / 9 kgs

We are continually improving and modifying our product range and reserve the right to vary the specifications without prior notice. All dimensions and weights quoted are approximate and we accept no responsibility for variance. E&OE. See Graphic Templates for graphic bleed specifications.

Parts Included:

Code	Qty	Description
VFC-07-A-G	x1	1178MM (46.37”)W X 1000MM (39.38”)H FABRIC GRAPHIC W/FCE-2 ALL SIDES
VFC-07-B-G	x1	400MM (15.75”)W X 1000MM (39.38”)H FABRIC GRAPHIC W/FCE-2 ALL SIDES
TUBE-30-910	x2	910MM X 30MM TUBE WITH ES30 HOLES BOTH ENDS
CB10-R	x4	50MM ROUND PHCF2 CORNER BRACKET
F24	x2	986MM (38.32”) PMFC2-90 EXTRUSION - WITH IB2 LOCK HOLES BOTH SIDES
F43	x6	300MM (11.81”) PHFC2 EXTRUSION WITH LOCKS TWO ENDS
V-LG-02	x1	1005MM X 450MM (39.5625” X 17 .72”) V LEG 50MM CHANNEL TUBE
VFC-07-CT	x1	COUNTERTOP FOR VECTOR FRAME COUNTER VFC-07
PMFC2-90-CAP	x4	PMFC2 90 DEGREE EXTRUSION CAP

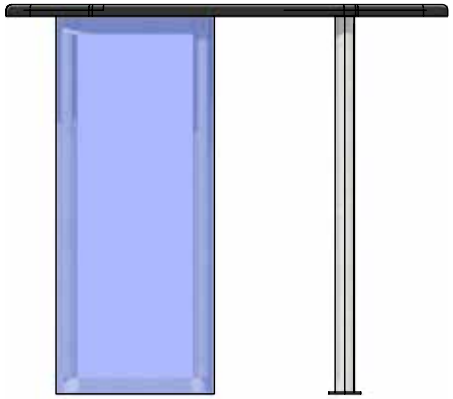

Overhead view

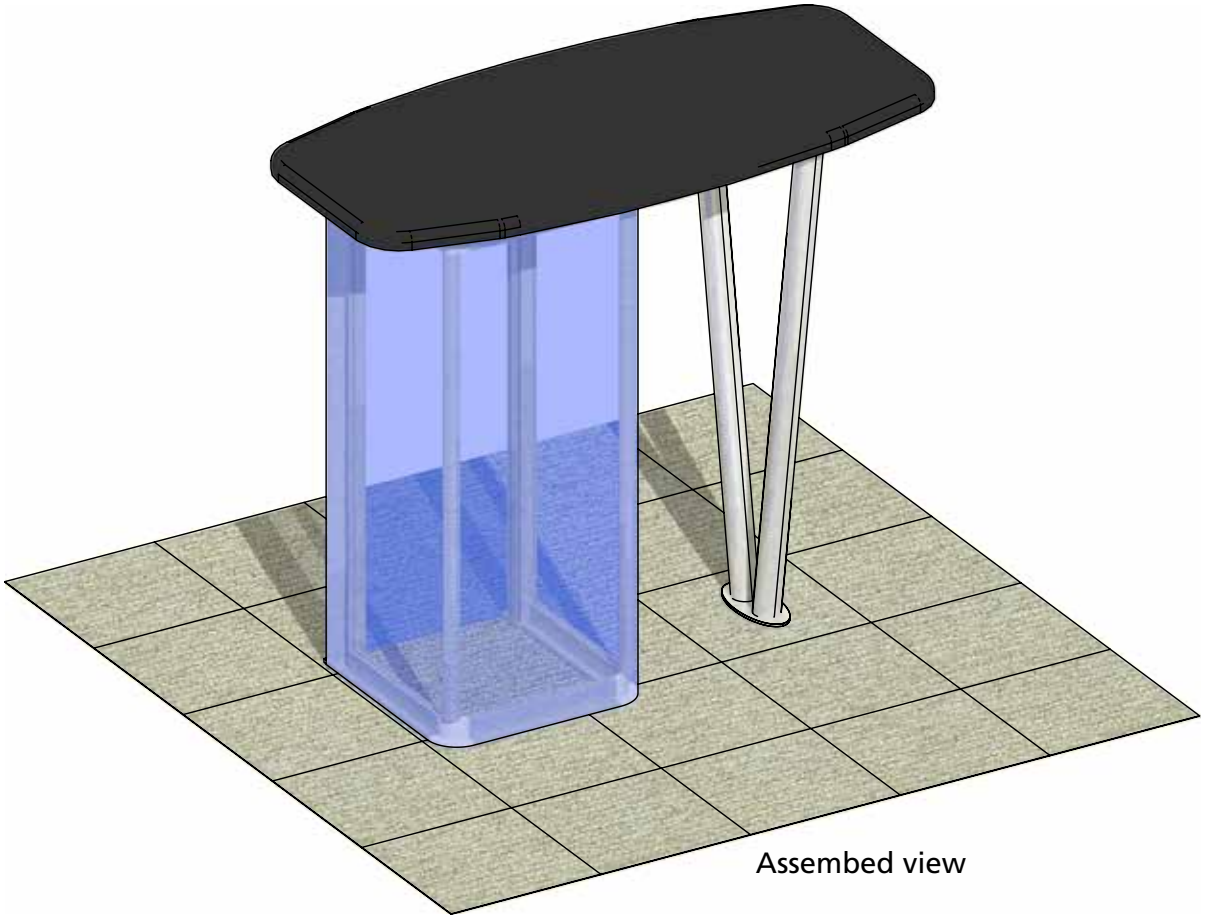

Assembed view

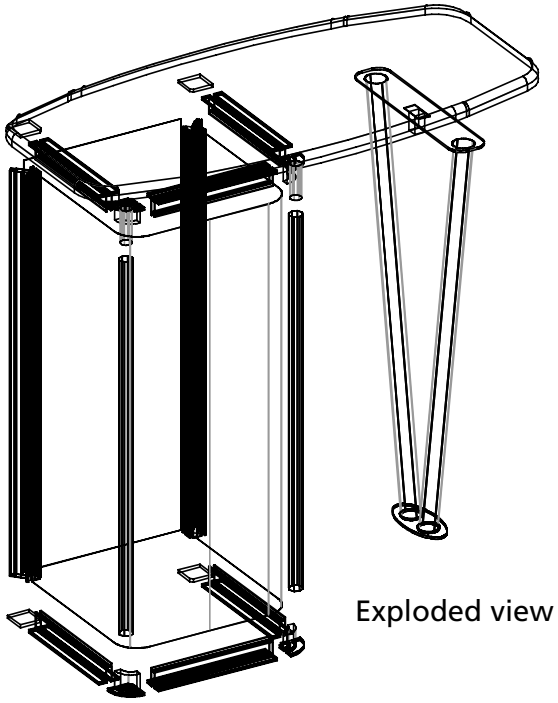

Exploded view

Step 1: Assemble Counter Frame

Arrange pieces on the floor as shown in the diagram below. Assemble frame sides by securing CB10-R to F43 and TUBE-30-910. Continue frame assembly by locking F48s, F54s and F24s to extrusion. When locking be sure to turn each cam a little bit and then go back and tighten to the proper tension. Take care to turn locks only a quarter turn, so as to not strip the locks by over tightening.

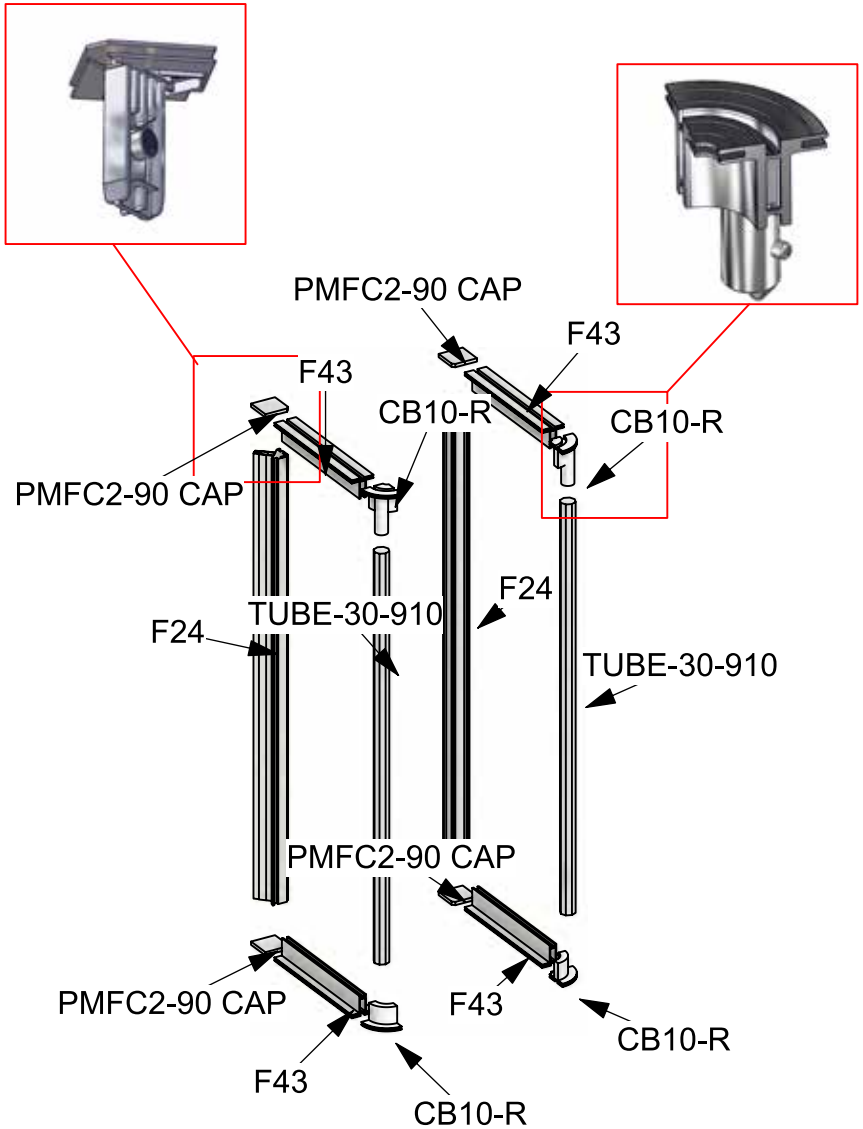

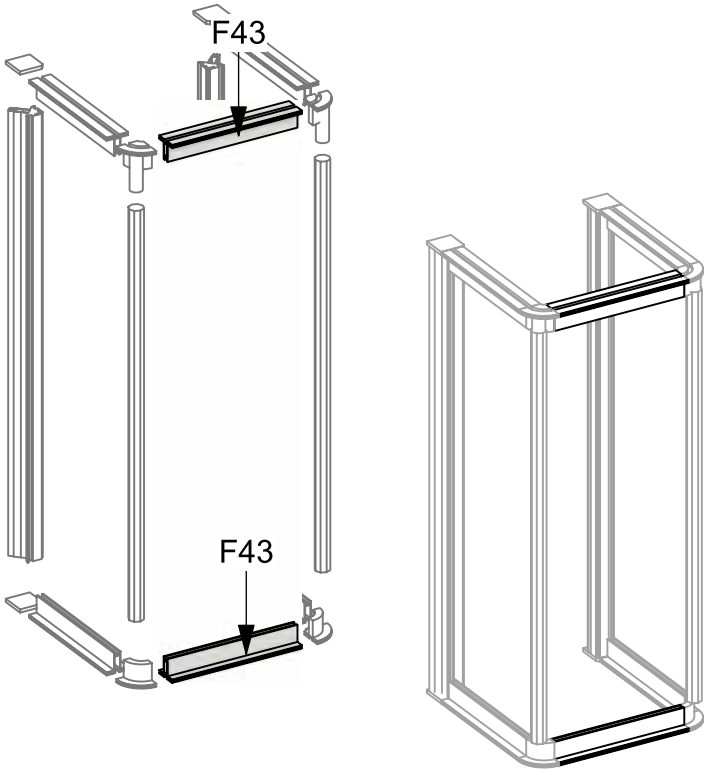

Step 2: Apply Graphics & Attach Countertop
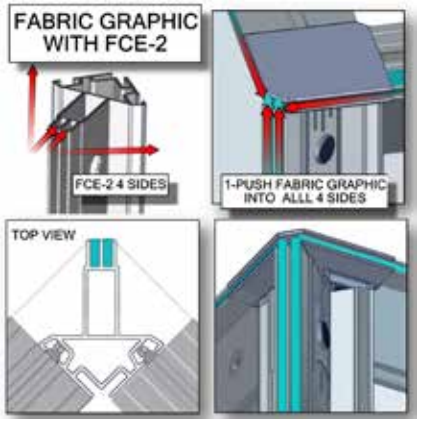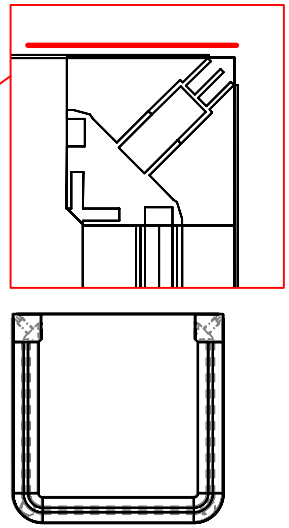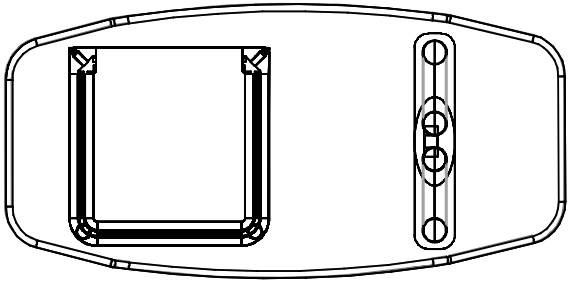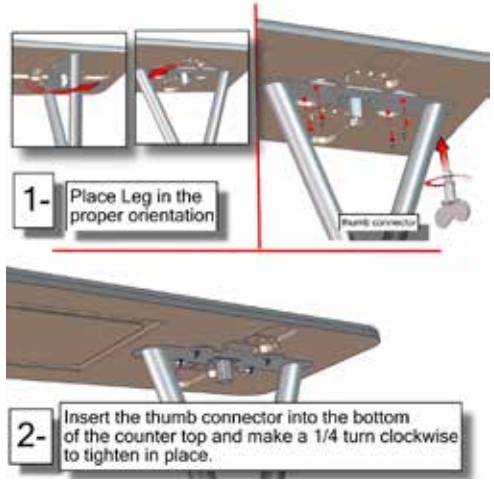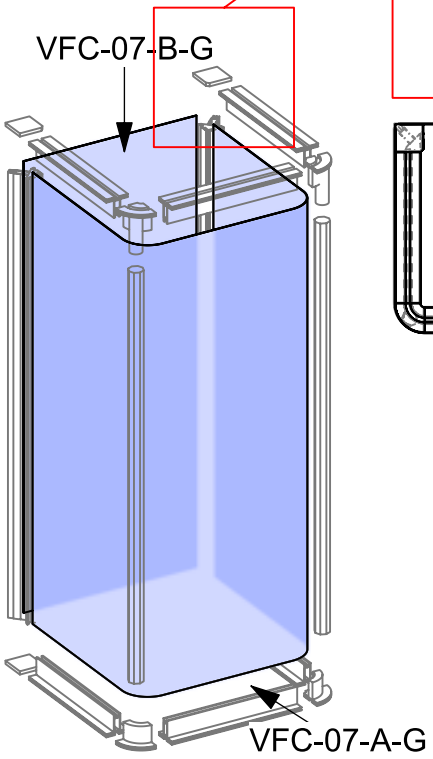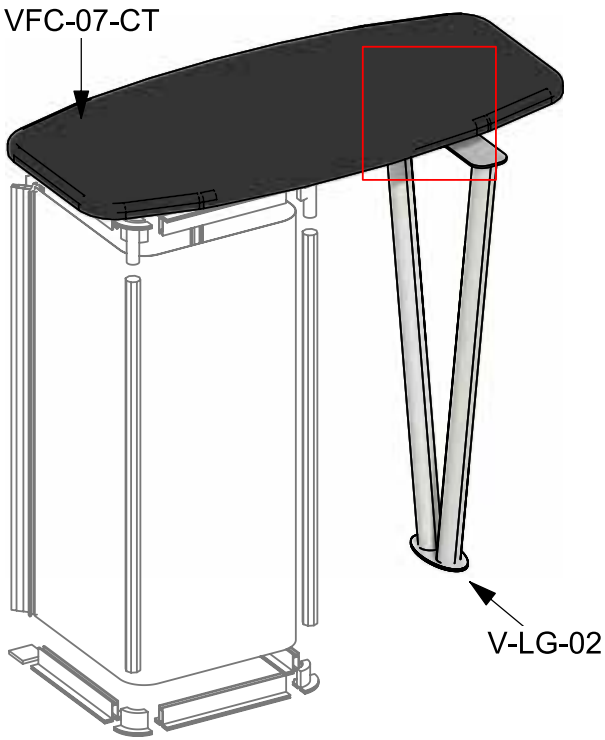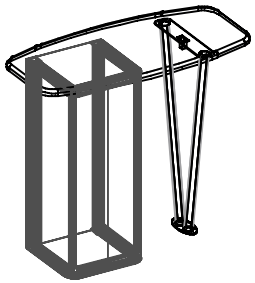
Apply push-fit fabric graphic(s) by pressing the FCE-2 edge of graphic into the channel of the extrusion. Start in upper left corner, go across the top and then down the sides to the bottom. Repeat for each side. Assure each graphic is tightly inserted. When taking graphics off, take care to gently pull by attached pull tab. To secure countertop, first place leg in the proper orientation. Insert the thumb connector into the bottom of the countertop and make a 1/4 turn clockwise to tighten in place.