Formulate Designer Series 10’ Backwall - Kit 01

FMLT-DS-10-01
Formulate® Designer Series 10ft displays have unique stylistic features and shapes, are portable and easy to assemble. The aluminum tube frame features snap-buttons and/ or spigot connections and zipper pillowcase fabric graphics. All displays come in portable, wheeled transit cases. Simply pull the pillowcase fabric graphic(s) over the frame and zip.

features and benefits:

- Premium aluminum tube frames with spigot assembly
- Easy to store and ship
- Quick to set up
- Weighted feet for added stability
- Two zipper pillowcase fabric graphics
- Kit includes: PM4S3 monitor kiosk featuring the medium monitor mount, can hold 32-55” monitor / max weight 40lbs
- Lifetime limited hardware warranty against manufacturer defects

dimensions:

Hardware

Assembled unit:
116.3”w x 96”h x 50.1”d
2954mm(w) x 2438mm(h) x 1273mm(d)

Approximate weight with cases:
150 lbs / 68 kgs

Shipping

Packing case(s):
2 OCE Cases

Shipping dimensions:
OCE: Expandable case length (l) may vary
40” - 66”l x 18”h x 18”d
1016mm-1677mm(l) x 458mm(h) x 458mm(d)

Approximate total shipping weight
(includes cases & graphics):
162 lbs / 73.5 kgs

Graphic

Refer to related graphic template for more information.

Visit:
www.exhibitors-handbook.com/graphic-templates

additional information:

Graphic material:
dye-sublimation zipper pillowcase fabric

We are continually improving and modifying our product range and reserve the right to vary the specifications without prior notice. All dimensions and weights quoted are approximate and we accept no responsibility for variance. E&OE. See Graphic Templates for graphic bleed specifications.

Included In Your Kit

Tools, Components, & Connectors

ALLEN KEY SET x1

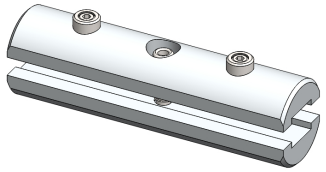

ES30 x10

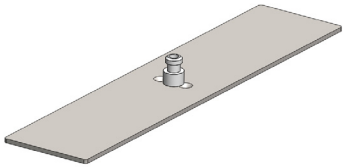

PLT-BP-LN114-S2-450 x2

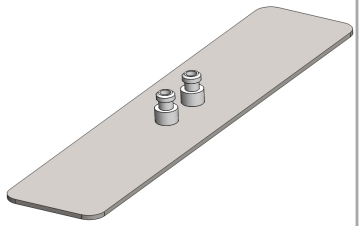

PLT-BP-LN114-S3-450 x1

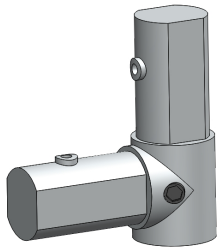

ES30-90B x4

TC-30-A x2

TCP-3030-R x1

PM4S3-MK-M x1

Graphics

FMLT-DS-10-01-A-G x1

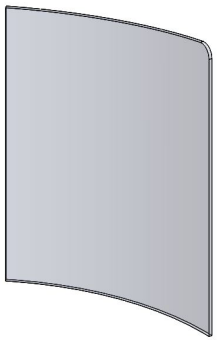

FMLT-DS-10-01-B-G x1

Included In Your Kit

Tubes

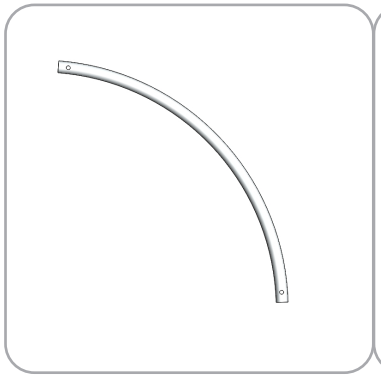

DS-10-01-A-T1 x1

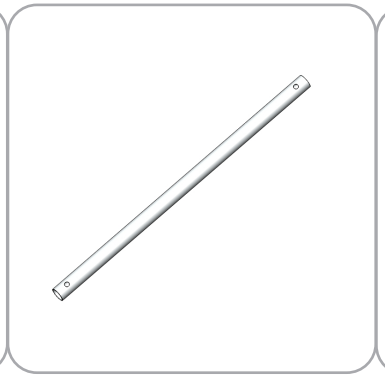

DS-10-01-A-T2 x2

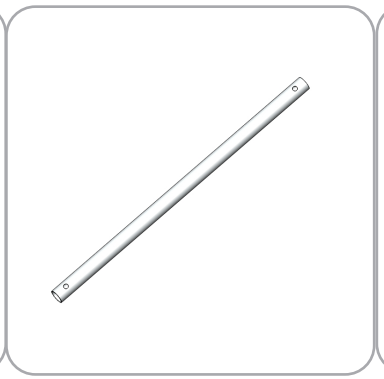

DS-10-01-A-T3 x2

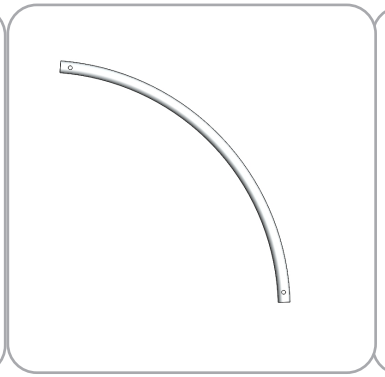

DS-10-01-A-T4 x1

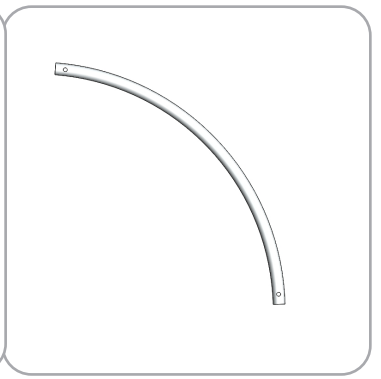

DS-10-01-B-T1 x2

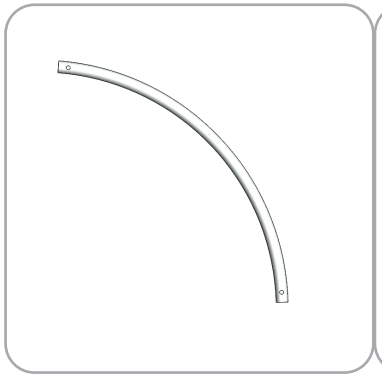

DS-10-01-B-T2 x2

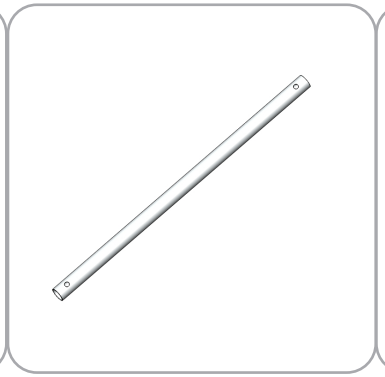

DS-10-01-B-T3 x2

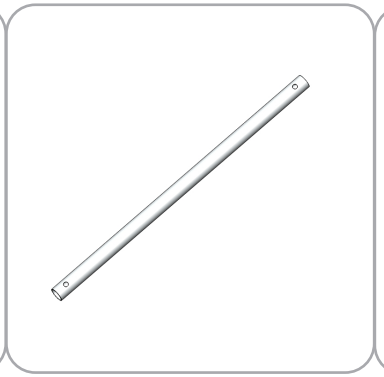

DS-10-01-B-T4 x2

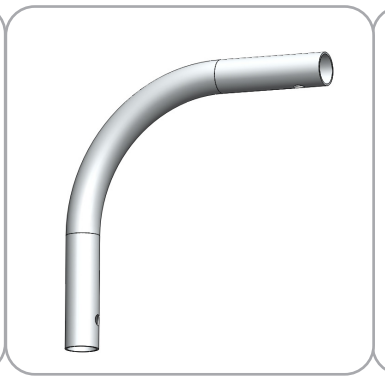

DS-10-01-B-T5 x1

DS-10-01-B-T6 x1

Exploded View

FMLT-DS-10-01

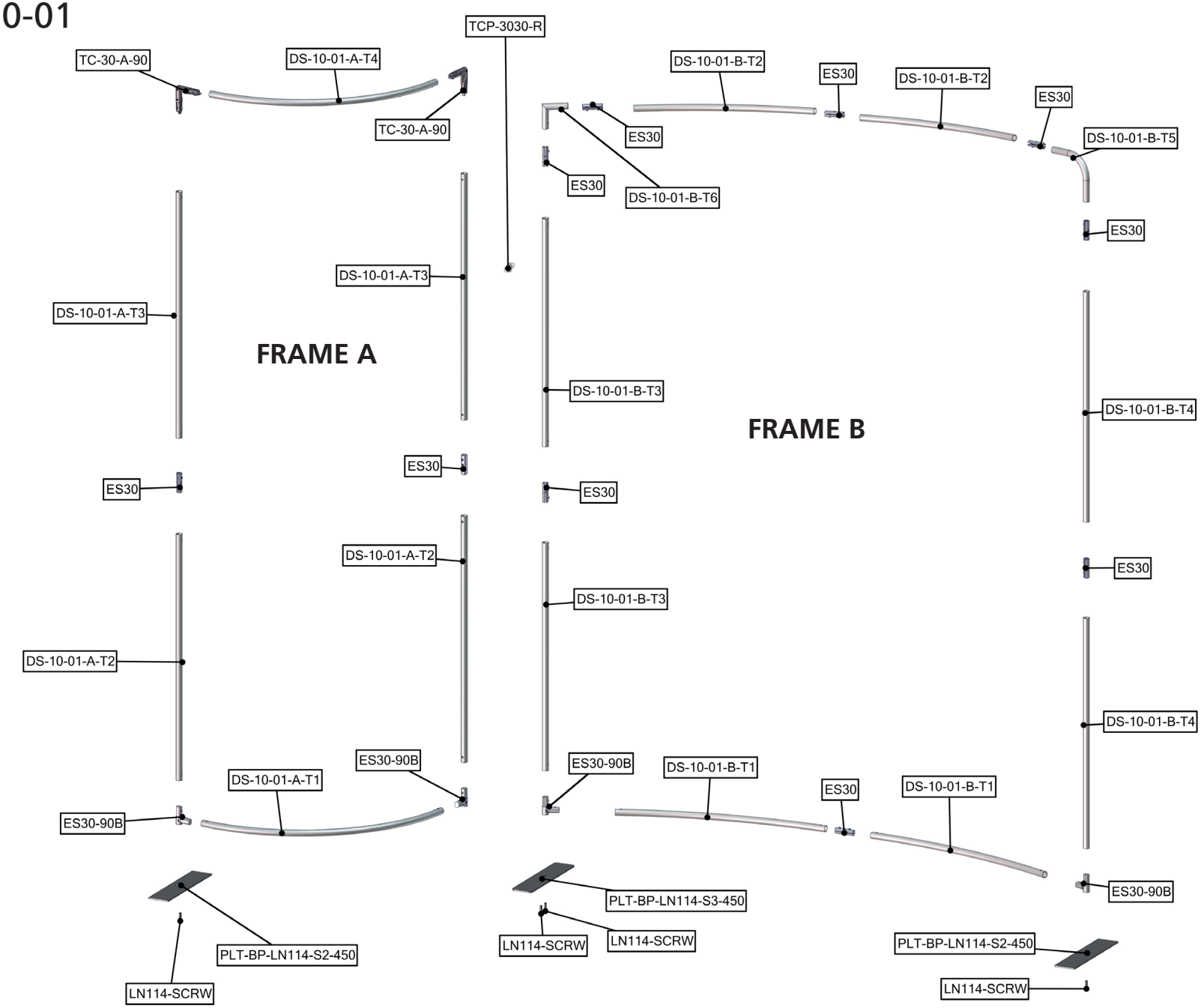

Labeling Diagram

FMLT-DS-10-01

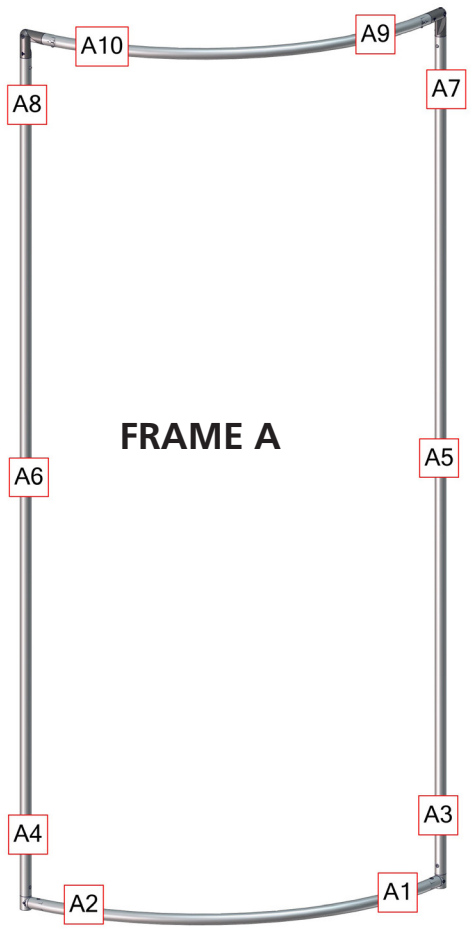

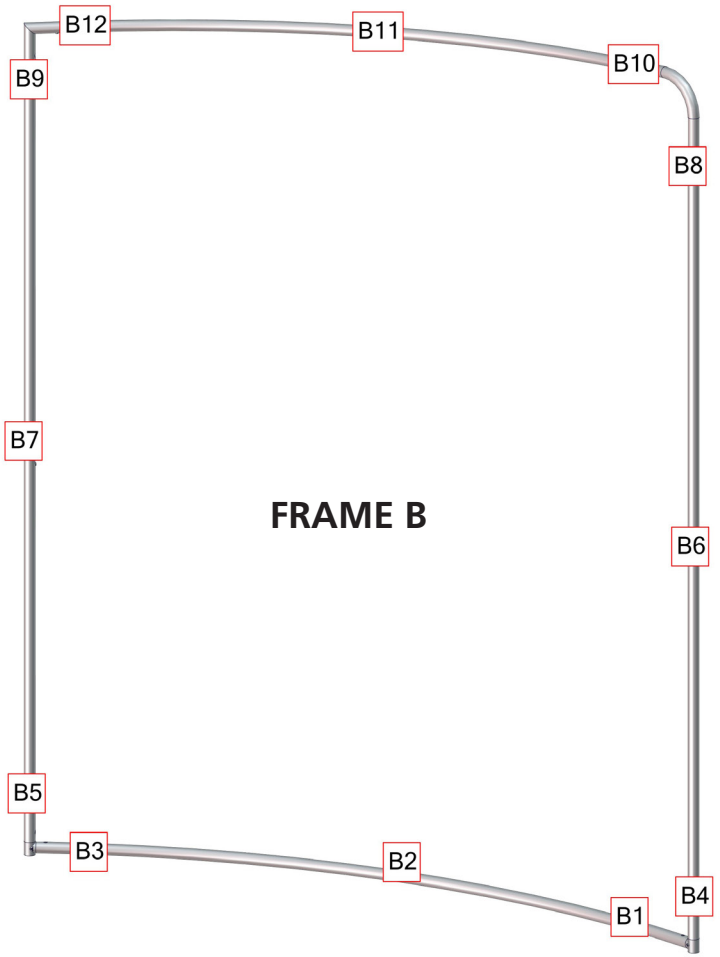

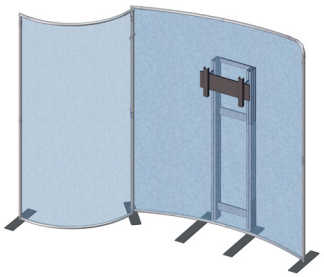

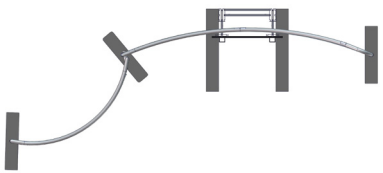

OVERVIEW

Connection Methods

Formulate™ structures use a number of different yet simple connection methods. Your kit will include one or more of the connection methods shown below. Steps within the Kit Assembly will reference a specific method for each connection point.

Connection Method 1: ES30 / ES50 / ES75

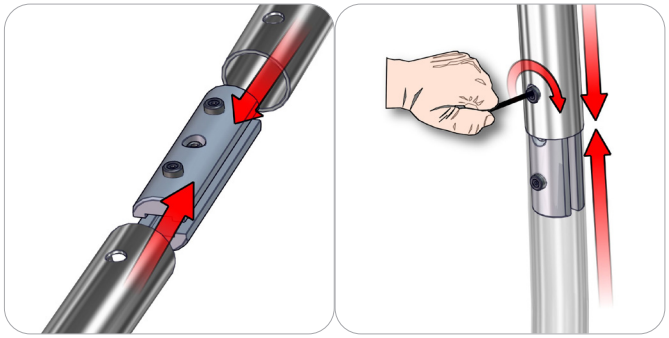

Compress the unlocked connector and slide one tube onto each end. Lock both screws carefully using your allen key tool. Be sure to lock securely, but do not overtighten.

Connection Method 2: Snap Buttons & Swage

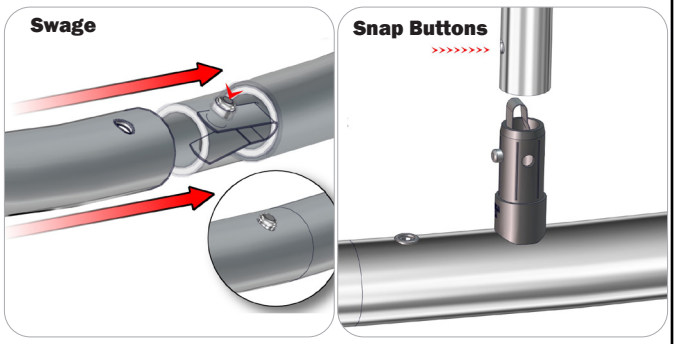

Locate the snap button on the connector or swage tube. Locate the hole on the corresponding tube. Press the snap button with your thumb and slide the tube and connector together so that the snap button snaps fully into the lock hole. To disassemble, press the snap button and pull apart.

Connection Method 3: ES30-90B / ES30-I / ES30-C

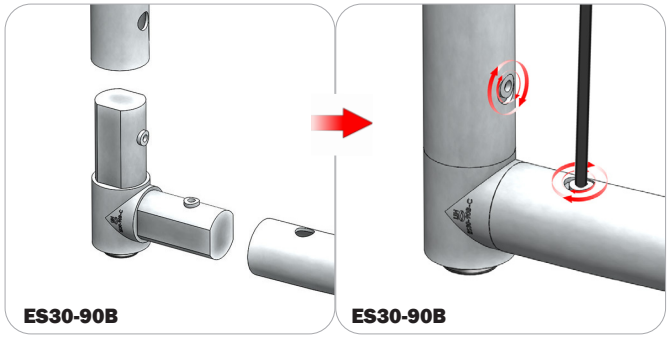

Compress one unlocked end of the connector and slide it through one tube end. Compress the other end of the connector and slide the second tube on. Lock both screws carefully using your allen key tool. Be sure to lock securely, but do not overtighten.

Connection Method 4: Tube Clamps

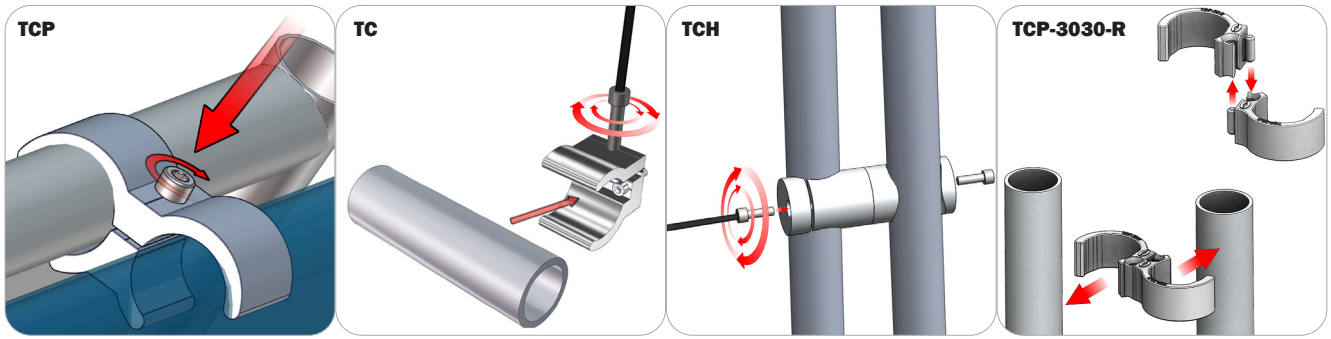

Be sure to fully assemble all frames before using clamps. With the clamp unlocked, place one tube of the first frame into the mouth of the clamp. Place the second tube (if applicable) into the second mouth of the clamp. With both frame's tubes in the clamp, be sure to lock securely, but do not overtighten.

Kit Assembly

Step by Step

Step 1.

Gather the components necessary for assembling Frame A and lay them flat on the floor. Assemble in the order the Labeling Diagram instructs. Lock your connectors into place using the provided allen key set.

Please reference Connection Methods 1, 2 and 3 for more details.

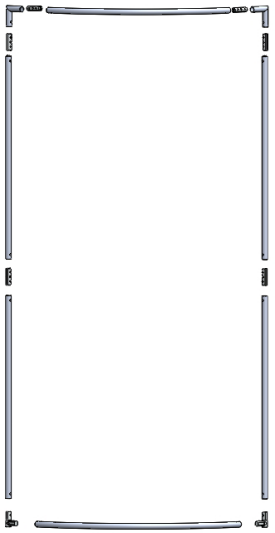

Step 2.

Gather the components necessary for assembling Frame B and lay them flat on the floor. Assemble in the order the Labeling Diagram instructs. Lock your connectors into place using the provided allen key set.

Please reference Connection Methods 1 and 3 for more details.

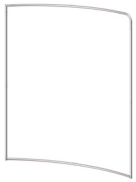

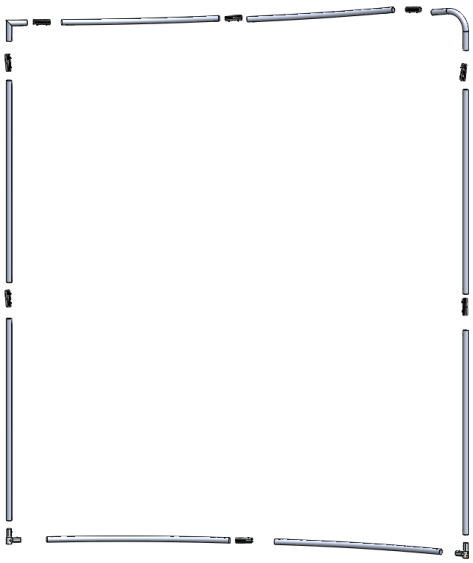

Step 3.

With Frame A laying flat on the floor, locate your pillowcase A graphic. With the pillowcase unzipped, encase Frame A by covering the frame from top to bottom.

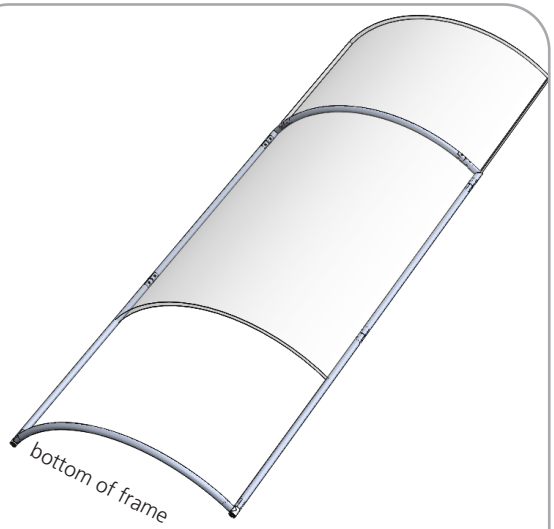

Step 4.

With Frame B laying flat on the floor, locate your pillowcase B graphic. With the pillowcase unzipped, encase Frame B by covering the frame from top to bottom.

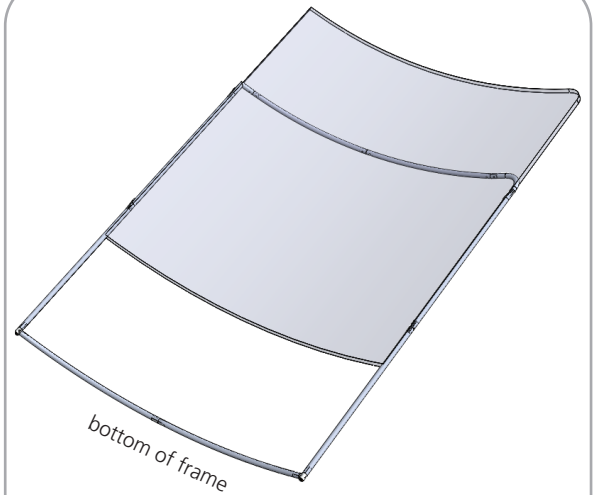

Kit Assembly

Step by Step

Step 5.

Locate the Stabilizing Base LN114-S2. Attach the foot to the left side of Frame A and the right side of Frame B. Use the allen key tool provided to lock the foot to the ES30-90B on the frames.

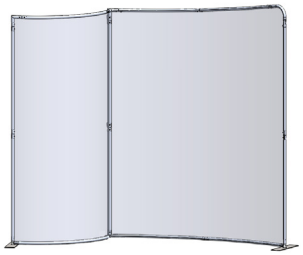

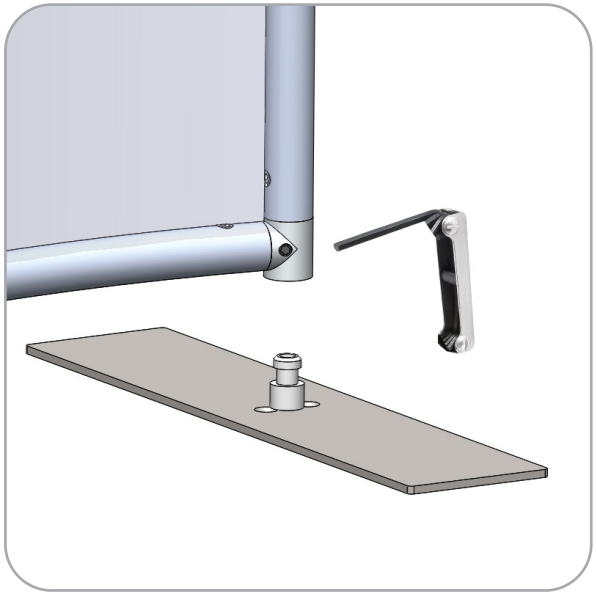

Step 6.

Locate the Stabilizing Base LN114-S3. Attach the foot to the right side of Frame A and the left side of Frame B. Use the allen key tool provided to lock the foot to the ES30-90B on the frames.

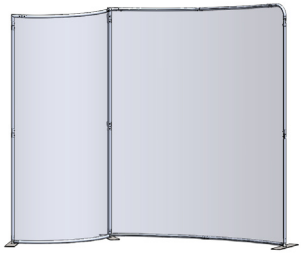

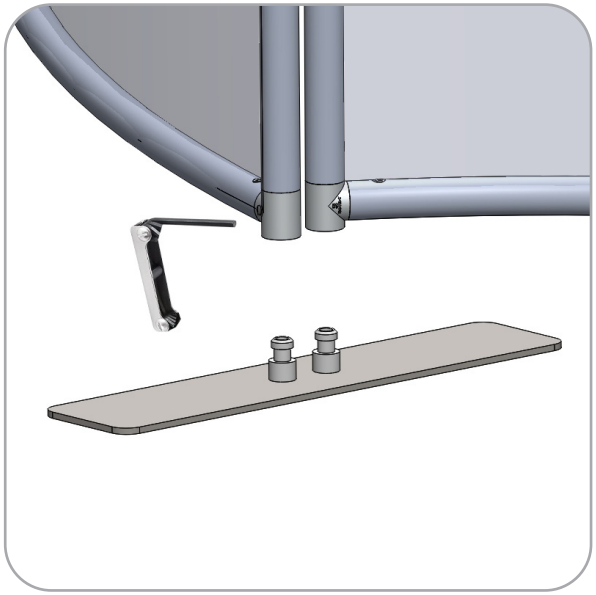

Step 7.

Use the TCP-3030-R connector to brace both frames together at the top insides of both frames.

Please reference Connection Method 4 for more details.

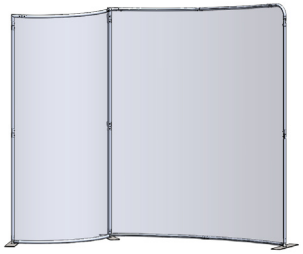

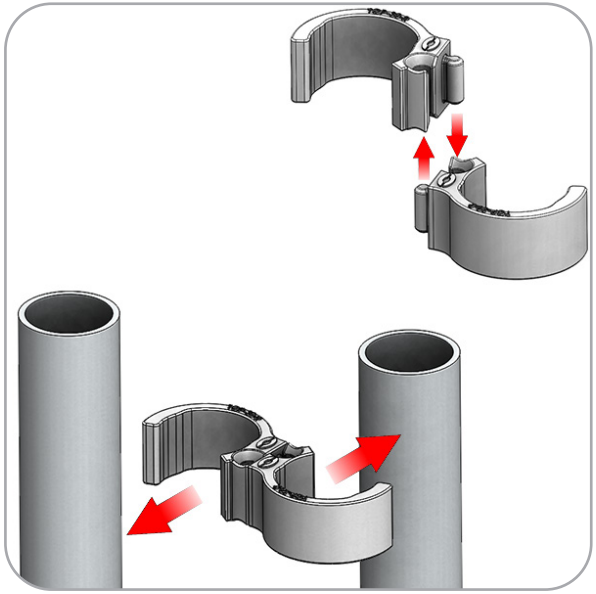

Step 8.

To complete your setup, assemble and attach the monitor kiosk behind Frame B.

Please reference the PM4S3-MK setup instructions for more details.

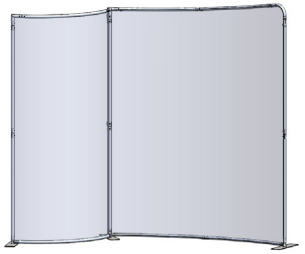

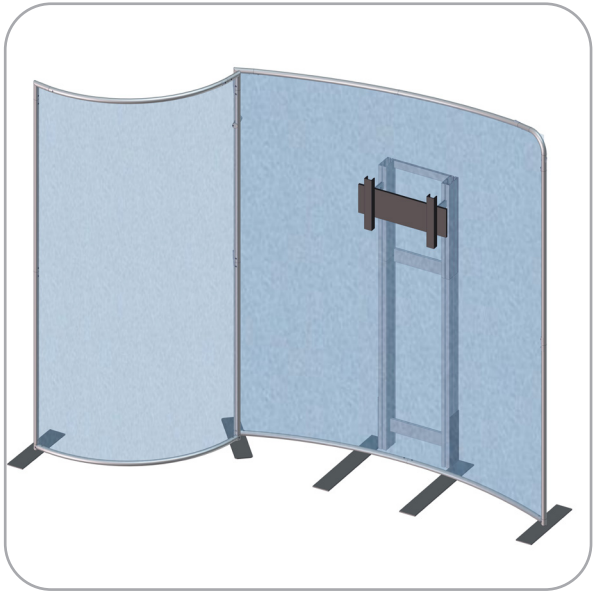

PM4S3 Monitor Kiosk

PM4S3-MK-M
PM4S3-MK-L
Kiosk displays are portable and easy to assemble. The aluminum extrusion frame features cam locks, tension glide connections and medium or large monitor mounts. This kiosk comes in a expandable shipping case.

features and benefits:

- Premium aluminum extrusion frames with cam lock and tension glide assembly
- Easy to store and ship
- Quick to set up
- Weighted feet for added stability
- Kiosk Kit includes a medium or large monitor mount
- Lifetime limited hardware warranty against manufacturer defects

dimensions:

Hardware	Shipping
Assembled unit: Medium or Large 25.59”w x 70.87”h x 25.59”d 650mm(w) x 1800mm(h) x 650mm(d) Approximate weight: (excludes cases & monitor mount) Medium or Large 40 lbs / 19 kgs	Packing case(s): Medium or Large 1 OCE Case Shipping dimensions: OCE: Expandable case length (l) may vary 40” - 66”l x 18”h x 18”d 1016mm-1677mm(l) x 458mm(h) x 458mm(d) Approximate total shipping weight: (includes cases & monitor mount) Medium 83 lbs / 38 kgs Large 85 lbs / 39 kgs

additional information:

-Medium monitor mount can hold 32-55” monitor/ max weight 40lbs

-Large monitor mount can hold 40”-65” monitor/ max weight 40lbs

-Monitor not included

-If shipping with backwall kit cases may vary

We are continually improving and modifying our product range and reserve the right to vary the specifications without prior notice. All dimensions and weights quoted are approximate and we accept no responsibility for variance. E&OE.

Included In Your PM4S3 Monitor Kiosk

Tools, Components, Connectors & Extrusions

5MM ALLEN-T x1

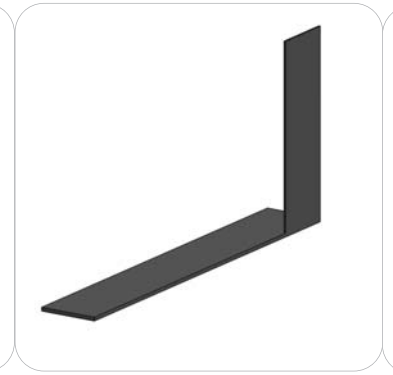

PM4S3-MM-FOOT-L x1

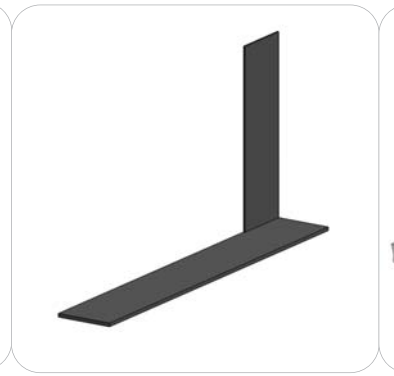

PM4S3-MM-FOOT-R x1

LN100 x6

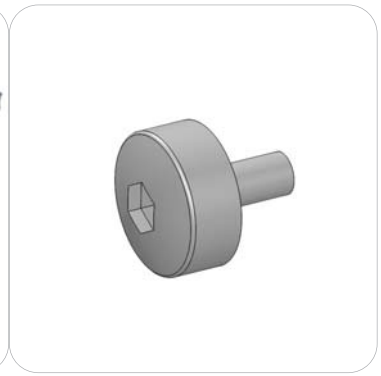

M5 THUMBSCREW x8

PH2-350-L-L x3

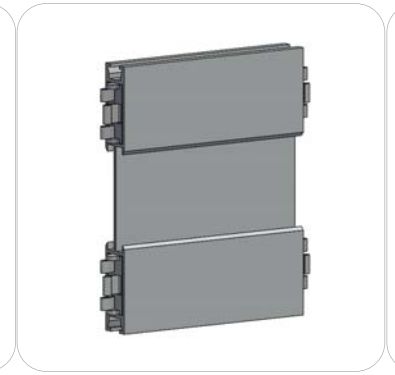

PH5-100-L-L x2

PM4S4-150 x2

PM4S3-600-A165-A165 x2

PM4S3-1200-A165-A165 x2

PH2-300-TG x2

EXT-M-MB (or) EXT-LG-MB x1
Fastening Hardware Included

Exploded View

PM4S3-MK-M
PM4S3-MK-L

Please note:
This is the the kiosk frame build for either medium or large kit.

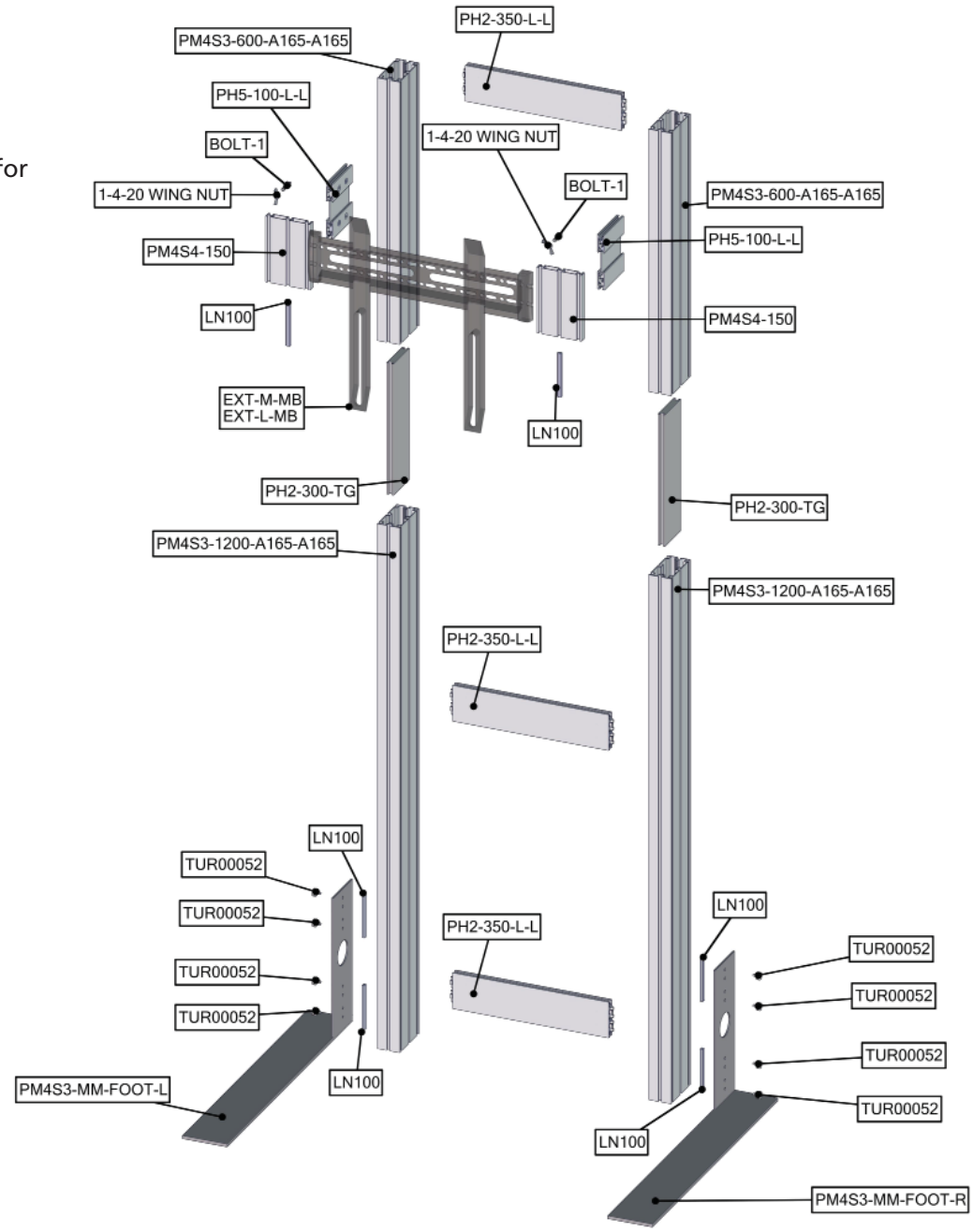

Kit Assembly

Step by Step

Step 1.

Reference the image to the right. Locate the coded extrusions. Slide the PH2-300-TG connector into one end of the PM4S3-1200-A165-A165 so that it goes as deep as the internal pins. Connect the PM4S3-600-A165-A165 by sliding it over the PH2-300-TG. Repeat for this step for the second vertical.

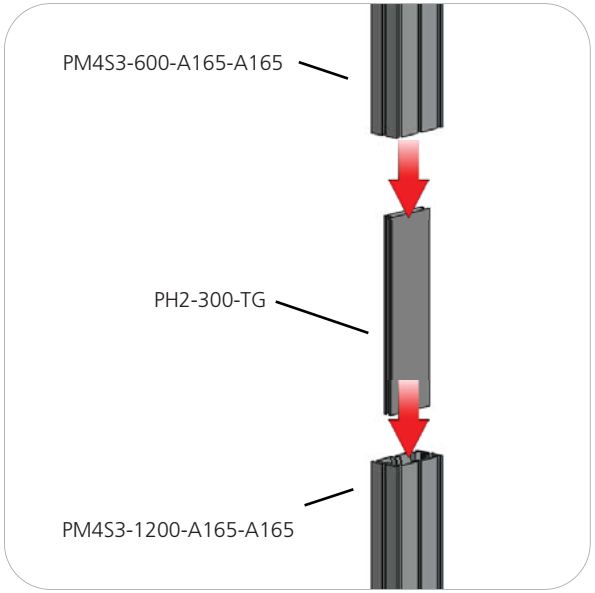

Step 2.

Collect your extrusions and handtool. Using the provided handtool, lock the extrusions into the back channel of the three channel PM4S3 faces as shown in the image below.
Be sure the locks face toward the back of the assembly and do not over tighten.

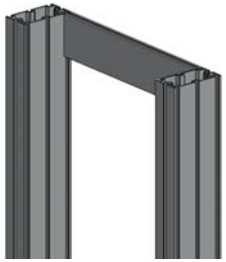

Step 3.

Locate the M5 thumbscrews, LN100s, and the PM4S3-MM stabilizing bases. Slide the LN100s into the middle channel of the PM4S3. Hand screw the M5 thumbscrews through the base holes and into the LN100 holes. Use the handtool to securely fasten the M5 Thumbscrews. Do not over tighten.

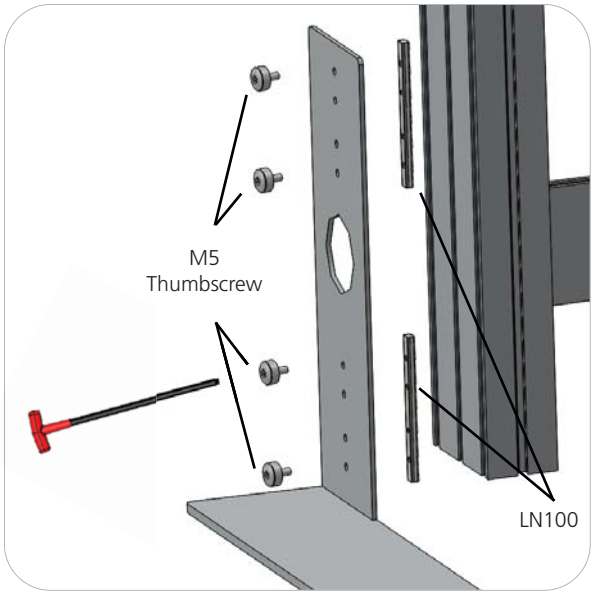

Step 4.

Measure from the ground to the center of the hole in your main kit's graphic. Lock the center of your PH5-100-L-L into the PM4S3 stacks at the dimension height of the graphic hole. Do not over tighten.

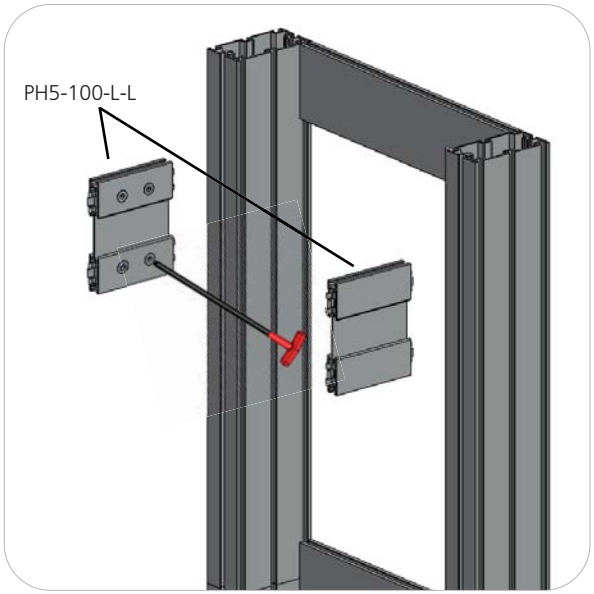

Kit Assembly

Step by Step

Step 5.

NOTE: Your main backwall assembly must be completed with graphics before completing this step of the monitor kit.

Lock your PM4S4-150 to the ends of the PH5-100-L-L. Do not over tighten.

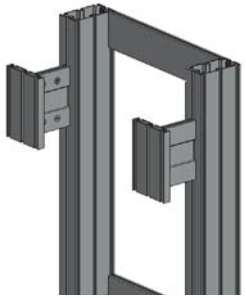

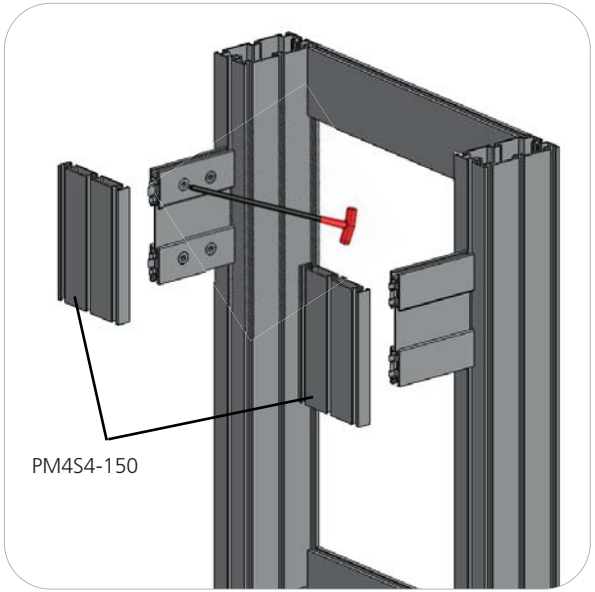

Step 6.

Set your monitor stand so that the extrusion arms fit through the graphic hole. Use the provided fastening hardware to complete your monitor stand. Slide the LN100 into the bottom center channel of the PM4S4-150. Next, slide the Square Head Bolt into the top center channel of the PM4S4-150. Apply the monitor bracket and spacer washer before fastening with the wingnut. Monitor mount may vary depending on size. Monitor not included.

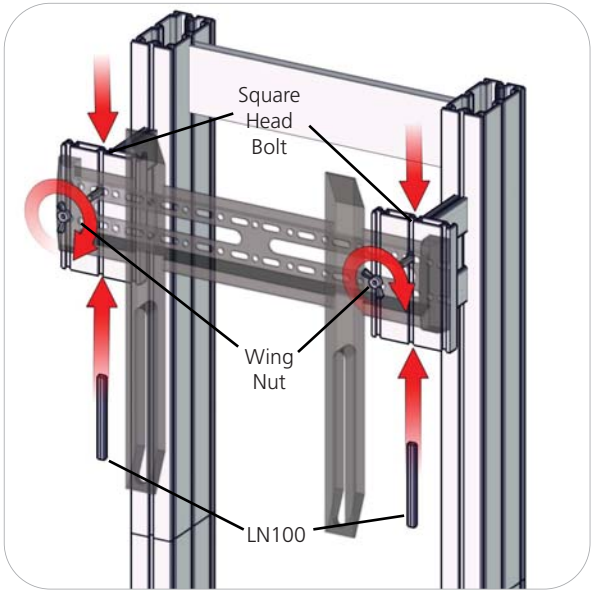

Step 7.

Setup is complete.

Monitor Bracket Instructions

Extrusion Channel Applications

EXT-SM-MB

Sizes: 17” - 37”
Max weight varies per application

Assembled unit:
9”w x 16”h x 1.4”d
230mm (w) x 410mm (h) x 35mm (d)

Shipping dimensions:
14”l x 6”h x 4”d
356mm (l) x 152mm (h) x 102mm (d)

Approximate total shipping weight:
6 lbs / 2.7 kgs

VESA:
75 x 75 - 200 x 200mm

EXT-M-MB

Sizes: 32” - 55”
Max weight varies per application

Assembled unit:
16”w x 16”h x 1.4”d
410mm (w) x 410mm (h) x 35mm (d)

Shipping dimensions:
24”l x 4”h x 4”d
610mm (l) x 102mm (h) x 102mm (d)

Approximate total shipping weight:
7 lbs / 3.2 kgs

VESA:
100 x 100 - 400 x 400mm

EXT-LG-MB

Sizes: 40” - 65”
Max weight varies per application

Assembled unit:
24”w x 16”h x 1.4”d
610mm (w) x 410mm (h) x 35mm (d)

Shipping dimensions:
28”l x 6”h x 6”d
711mm (l) x 152mm (h) x 152mm (d)

Approximate total shipping weight:
8 lbs. / 3.6 kgs

VESA:
100 x 100 - 600 x 400mm

Included hardware:

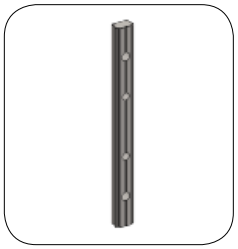

LN-100 x2

M5 x 10

LN-LCD-SCW x2

1/4”-20 x 1”

BOLT-1 x2

1/4”-20

Flange Wingnut x2

EXTRUSION CONNECTION

Channel Connection A

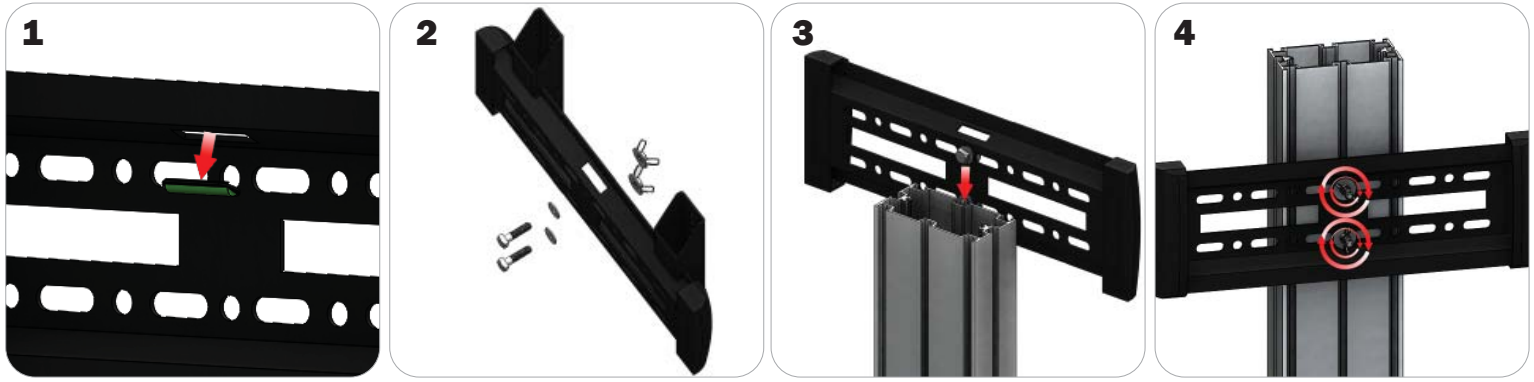

Locate all components needed to assemble the monitor mount with the channel connection A method. You will need (1) monitor bracket, (2) square head bolts, (2) washers, and (2) wingnuts. **Step 1:** Apply pressure to the rear side of the leveling gauge clipped into the monitor mount to remove it. **Step 2:** Insert the provided bolts through the washers and center top and bottom holes of the monitor mount. Loosly thread your wingnuts onto the end of the bolts.**Step 3:** Slide the bolt heads down the extrusion channel. **Step 4:** Tighten your wingnuts to lock the monitor bracket in place. **Step 5:** Reference the included manufacturer monitor mount instructions for fastening your monitor to the bracket.

Channel Connection B

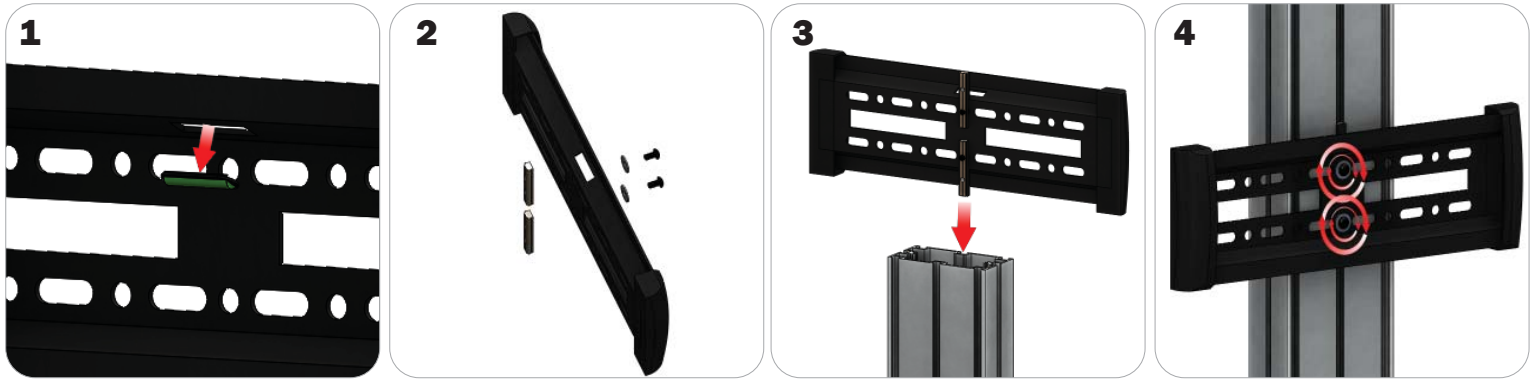

Locate all components needed to assemble the monitor mount with the channel connection B method. You will need (1) monitor bracket, (2) LN-LCD-SCW, (2) LN-100, and (2) washers. **Step 1:** Apply pressure to the rear side of the leveling gauge clipped into the monitor mount to remove it. **Step 2:** Loosly thread the LN-LCD-SCW screws through the washers, the center top and bottom holes of the monitor bracket, and through the LN-50 holes.**Step 3:** Slide the LN-100s down the extrusion channel. **Step 4:** Tighten your LN-LCD-SCW to lock the monitor bracket in place. **Step 5:** Reference the included manufacturer monitor mount instructions for fastening your monitor to the bracket.

TRI-30MM Channel Tube Connection

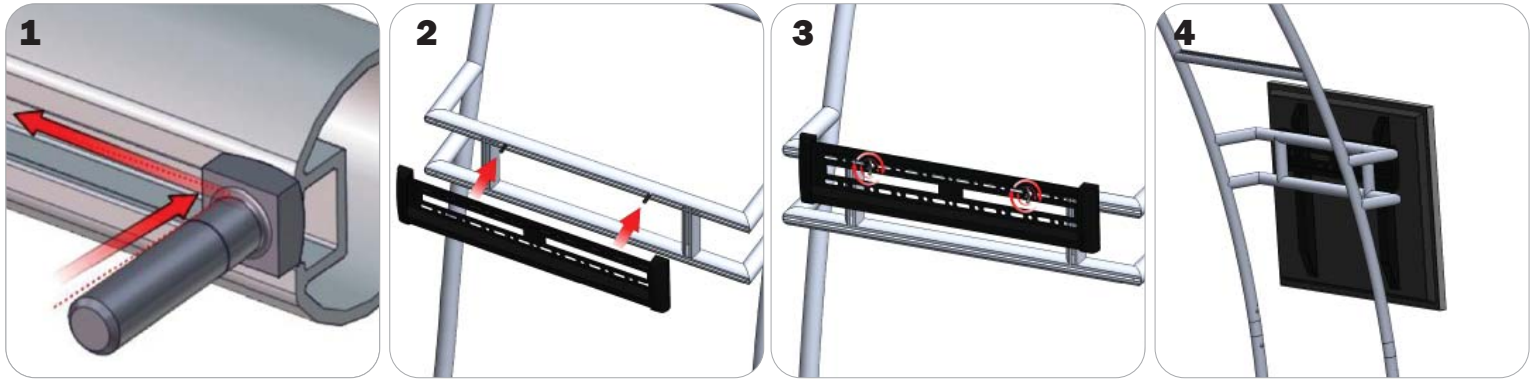

Locate all components needed to assemble the monitor mount with the TRI-30MM Channel Tube Connection method. You will need (1) monitor bracket, (2) Square Bolts, and (2) Wingnuts. **Step 1:** Slip the head of the square bolts into the extrusion channel of the tube. **Step 2:** Apply your monitor bracket to the protruding square bolts. **Step 3:** Lock your monitor bracket to the square bolts using the provided wingnuts. **Step 4:** Reference the included manufacturer monitor mount instructions for fastening your monitor to the bracket.